BJT BRIAN JAMES TRAILERS

Race Transporter 6

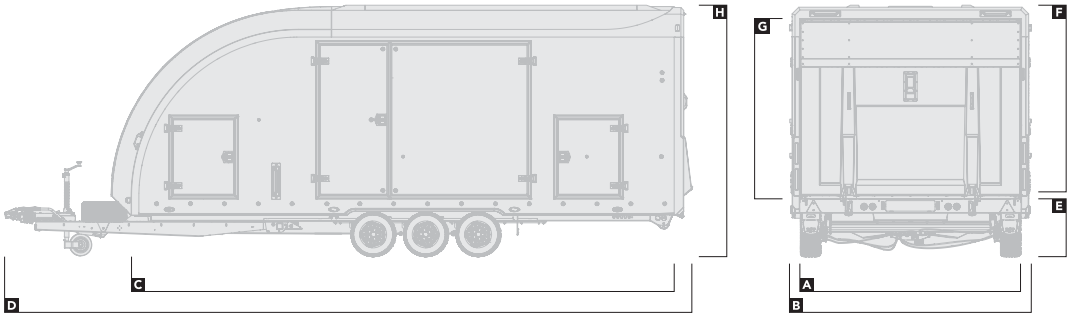

Overview

		396-2010	396-2020	396-2030	396-2040	396-2060	396-3010	396-3020	396-3030	396-3040	396-3060
Body colour		White	White	White	White	White	Black	Black	Black	Black	Black
DIMENSIONS						dimensions in **metres**					
Bed width	A	2.12	2.12	2.29	2.29	2.29	2.12	2.12	2.29	2.29	2.29
Overall width	B	2.39	2.39	2.55	2.55	2.55	2.39	2.39	2.55	2.55	2.55
Bed length	C	5.38	5.88	5.38	5.88	6.38	5.38	5.88	5.38	5.88	6.38
Overall length	D	7.2	7.7	7.2	7.7	8.2	7.2	7.7	7.2	7.7	8.2
Bed height	E	0.59	0.59	0.59	0.59	0.67	0.59	0.59	0.59	0.59	0.67
Internal height	F	1.94	1.94	1.94	1.94	1.94	1.94	1.94	1.94	1.94	1.94
Door aperture height	G	1.88	1.88	1.88	1.88	1.88	1.88	1.88	1.88	1.88	1.88
Overall height	H	2.64	2.64	2.64	2.64	2.67	2.64	2.64	2.64	2.64	2.67
CAPACITY						weight in **kg**					
Gross capacity		3,500	3,500	3,500	3,500	3,500	3,500	3,500	3,500	3,500	3,500
Load capacity		2,020	1,960	2,000	1,950	1,880	2,020	1,960	2,000	1,950	1,880

Load capacity will vary depending on options fitted - For accurate information on weights and pricing, use our interactive configurator at **www.brianjamestrailers.co.uk**

Equipment

OPTION PACKS	396-2010	396-2020	396-2030	396-2040	396-2060	396-3010	396-3020	396-3030	396-3040	396-3060
	● Standard ○ Option									
Lighting pack - includes: Full LED interior lights, loading lights & side reverse lights	○	○	○	○	○	○	○	○	○	○
Motorsport pack - includes: Assistor ramps, tyre rack & workbench	○	○	○	○	○	○	○	○	○	○

BJT BRIAN JAMES TRAILERS

Race Transporter 6

Equipment cont.

	396-2010	396-2020	396-2030	396-2040	396-2060	396-3010	396-3020	396-3030	396-3040	396-3060
ACCESSORIES					● Standard	○ Option				
Awning - available as LH, RH & both	○	○	○	○	○	○	○	○	○	○
Hand wash station	○	○	○	○	○	○	○	○	○	○
Paper towel dispenser	○	○	○	○	○	○	○	○	○	○
Mains power unit	○	○	○	○	○	○	○	○	○	○
360° camera	○	○	○	○	○	○	○	○	○	○
Rear-view camera	○	○	○	○	○	○	○	○	○	○
Reverse / Rear-view camera	○	○	○	○	○	○	○	○	○	○
Solar panel	○	○	○	○	○	○	○	○	○	○
DECK										
Slick pads x4	○	○	○	○	○	○	○	○	○	○
EXTERIOR										
Front / Rear access hatches	●	●	●	●	●	●	●	●	●	●
Front access hatches only	○	○	○	○	○	○	○	○	○	○
Split side doors	●	●	●	●	●	●	●	●	●	●
LIGHTING - EXTERIOR										
Full LED lighting	●	●	●	●	●	●	●	●	●	●
Loading lights	○	○	○	○	○	○	○	○	○	○
Reverse lights	○	○	○	○	○	○	○	○	○	○
LIGHTING - INTERIOR										
3x LED light strips	●	●	●	●	●	●	●	●	●	●
LED flood lights	○	○	○	○	○	○	○	○	○	○
LOADING										
Battery w/ charger	●	●	●	●	●	●	●	●	●	●
Electric tilt-bed	●	●	●	●	●	●	●	●	●	●
Electric winch	●	●	●	●	●	●	●	●	●	●
Electric winch wireless remote	○	○	○	○	○	○	○	○	○	○
Rear door / ramp	●	●	●	●	●	●	●	●	●	●
Assistor ramps	○	○	○	○	○	○	○	○	○	○
LOAD RESTRAINT										
Tie-down straps	●	●	●	●	●	●	●	●	●	●
Wheel chocks / Stop bar	●	●	●	●	●	●	●	●	●	●
RUNNING GEAR										
Alloy wheels - Silver or Anthracite	○	○	○	○	○	○	○	○	○	○
Locking hitch	●	●	●	●	●	●	●	●	●	●
Spare wheel	●	●	●	●	●	●	●	●	●	●
Additional spare wheel	○	○	○	○	○	○	○	○	○	○
STORAGE										
Deck storage w/ aluminium lids	●	●	●	●	●	●	●	●	●	●
Side storage racks	○	○	○	○	○	○	○	○	○	○
Store station	○	○	○	○	○	○	○	○	○	○
Tyre rack / Workbench / Vice	○	○	○	○	○	○	○	○	○	○